## FEMALE END VIEW

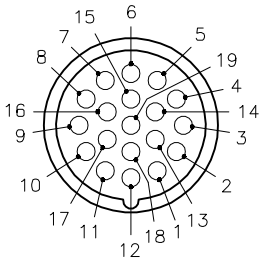


1 = BLACK #1
2 = WHITE #1
3 = DRAIN #1
4 = BLACK #2
5 = WHITE #2
6 = DRAIN #2
7 = BLACK #3
8 = WHITE #3
9 = DRAIN #3
10 = BLACK #4
11 = WHITE #4
12 = DRAIN #4
13 = BLACK #5
14 = WHITE #5
15 = DRAIN #5
16 = BLACK #6
17 = WHITE #6
18 = DRAIN #6
19 = GREEN/YELLOW

*M23 connector*

## WIRING DIAGRAM

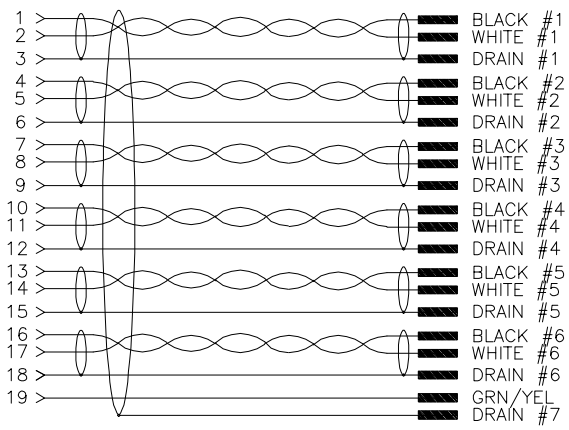


## SPECIFICATIONS

| | |
|---|---|
| CONTACT CARRIER MATERIAL | NYLON or PBT |
| CONTACT MATERIAL/PLATING | BRASS/GOLD |
| HOUSING MATERIAL/FINISH | STAINLESS STEEL/PASSIVATED |
| O-RING/GASKET MATERIAL | RUBBER (NBR or FPM) |
| RATED CURRENT [A] | 2.0 A |
| RATED VOLTAGE [V] | 150 V |
| OUTER JACKET MATERIAL/COLOR | PVC/PLUM |
| CONDUCTOR INSULATION MATERIAL | PVC |
| NUMBER OF CONDUCTORS [AWG] | 12x22 AWG; 1x18 AWG |
| DRAIN/SHIELD | 6x22 AWG DRAINS/INDIVIDUALLY SHIELDED, 100% OVERALL SHIELD; 1x22 AWG OVERALL DRAIN |
| CONDUCTOR ARRANGEMENT | 6 SHIELDED TWISTED PAIR W/DRAIN, 1 GND, 1 DRAIN |
| TEMPERATURE RANGE | -40°C to 105°C (-40°F to 221°F) |
| PROTECTION CLASS | MEETS IEC IP67 |
| CABLE RATINGS | UL: ITC/PLTC/AWM, 105C, 300V<br>CSA: CMG/AWM, 105C, 300V |
| MAXIMUM PANEL THICKNESS | 6.5 [0.256] |

## PANEL CUTOUT (TYPICAL)

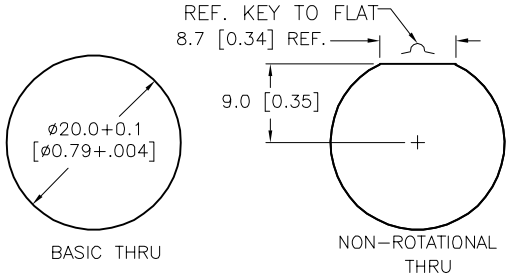


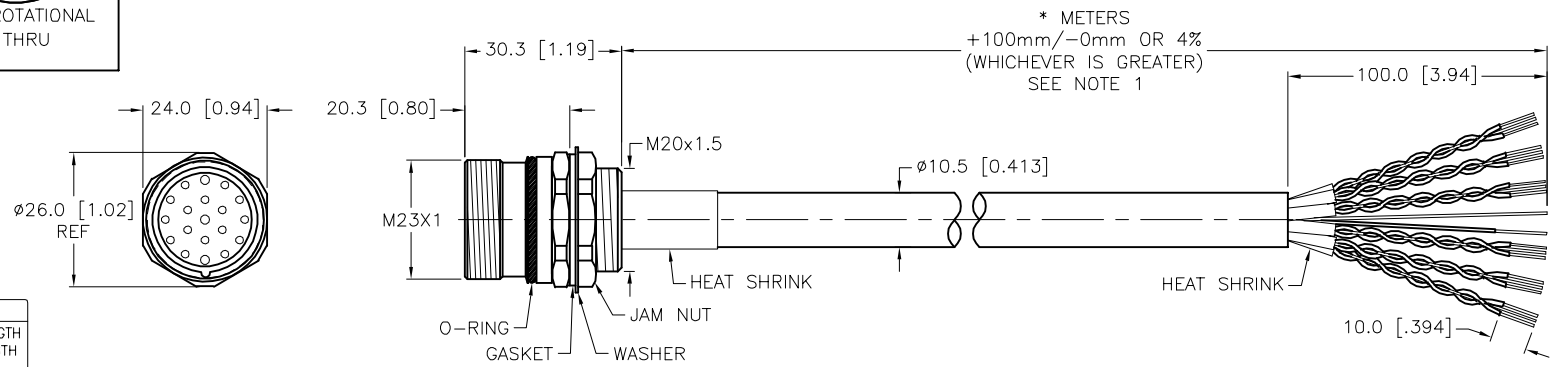


| CABLE LENGTH | TOLERANCE * |
|---|---|
| ALL LENGTHS | + 4% (OR 50mm) OF LENGTH<br>- 0% (OR 0mm) OF LENGTH<br>WHICHEVER IS GREATER |
| **STRIP LENGTH** | **TOLERANCE *** |
| 0-7mm | ±0.5mm |
| 8-29mm | ±1.0mm |
| 30-49mm | ±2.0mm |
| 50-69mm | ±3.0mm |
| 70-100mm | ±4.0mm |
| OVER 100mm | ±5.0mm |
| *** UNLESS OTHERWISE SPECIFIED** | |

**SOURCE DRAWING - FOR REFERENCE ONLY**

NOTES:

1. "*" INDICATES CABLE LENGTH IN METERS. CONTACT TURCK TO ORDER SPECIFIC LENGTHS.

| REV | DESCRIPTION | BY | DATE | ECO NO. |
|---|---|---|---|---|
| B | UPDATE RATED CURRENT | NF | 04/09/19 | 69299 |

RELATED DOCUMENTS
1.
2.
3.
4.

3RD ANGLE PROJECTION

THIS DRAWING IS CONFIDENTIAL AND THE PROPERTY OF TURCK INC. USE OF THIS DOCUMENT WITHOUT WRITTEN PERMISSION IS PROHIBITED.

TURCK

3000 CAMPUS DRIVE
MINNEAPOLIS, MN 55441
1-800-544-7769
(763) 553-7300
(763) 553-0708 fax
www.turck.us

MATERIAL: SEE SPECIFICATIONS

FINISH: SEE SPECIFICATIONS

ALL DIMENSIONS DISPLAYED ON THIS DRAWING ARE FOR REFERENCE ONLY

CONTACT TURCK FOR MORE INFORMATION

DRFT: RDS | DATE: 05/11/17
APVD: L.H. | SCALE: 1=1.5

UNIT OF MEASUREMENT
**MILLIMETER [ INCH ]**
DO NOT SCALE THIS DRAWING

DESCRIPTION: P-CKFLV 19-195-*

IDENTIFICATION NO.

REV: B

FILE: 777039626

SHEET 1 OF 1